Alan Lee

B.S. in Mechanical Engineering
Minor in Electrical Engineering

Mechanical Engineering Portfolio

Table of Contents

Personal Projects

Additive Manufacturing Study
Foldable Devices Hinge

Quick Release PCBA Enclosure
for Injection Molding

Auto Sorting Garbage Can
Engineering Hackathon

Class Projects

Media Dispensing System
Receiver Reservoir

Driving Vehicle
With Transmission

Automated Fruit Cutter
Basics of Robotics

alan.junmin.lee@gmail.com

Personal Project Repository
No work developed under confidentiality of employment

Personal Projects

Additive Manufacturing Study: Foldable Devices Hinge

Computation Topology Design

Overview

First attempt into topology optimization and organic lattice structures

Goal/Challenge

Replicate hinges used on foldable devices with additive manufacturing technologies, reducing cost and complexities.

Explore SLM or DMLS as potential substitute manufacturing process to improve mechanical design

First attempt learning topology optimization, organic lattice structures, and nTop software.

CAD

Siemens NX
- Direct Modeling

nTop
- Topology Optimization

FEA

nTop FEA

Technical Skills

SLM 3D Printing
Hinge Design
Topology Optimization
FEA

Personal Projects

Additive Manufacturing Study: Foldable Devices Hinge

Computation Topology Design

How does the mechanism function?

Ejector tooling marks visible on both metal and plastic components

Z Fold 7 “Gear Side”

CAM System to Lock Hinge

Metal Injection Molding (MIM) or Die Cast
CNC Post Processing/Threading

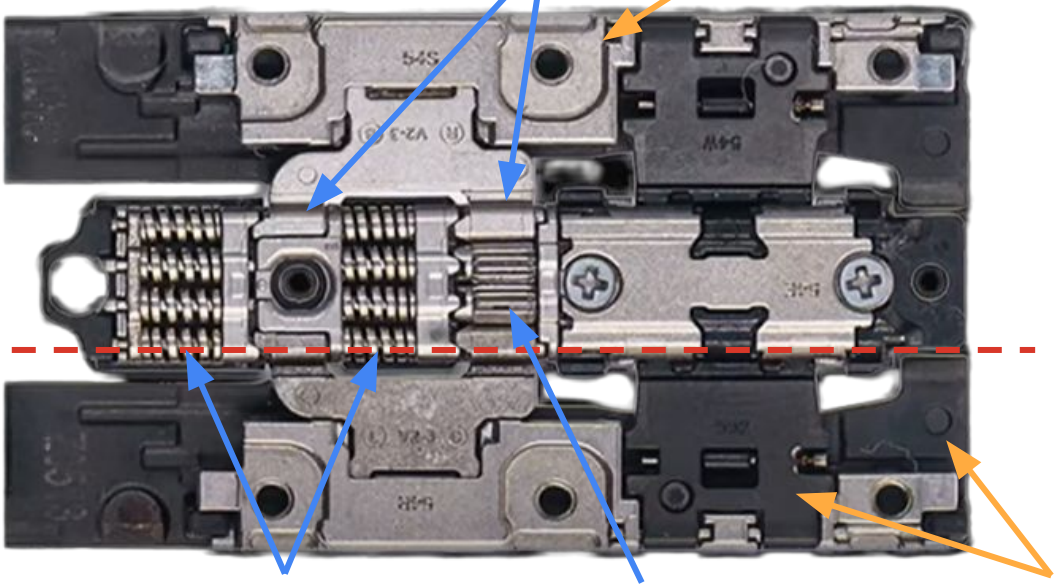

Axis of Rotation

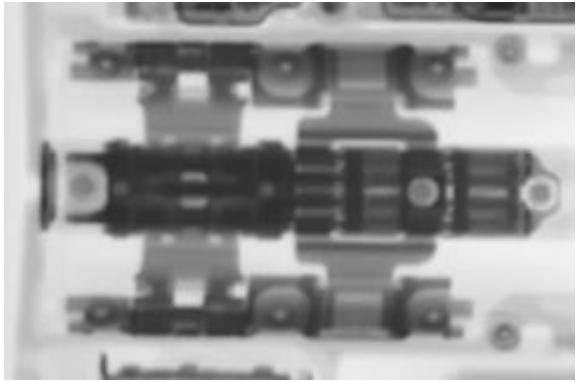

Insert Injection Molded Plastics
These are 2 separate parts

Springs

Gears

Materials and 3D Printing: Metals

	MIM	Die Casting	SLM/DMLS
Material Flexibility	High	Low (Non Ferrous Alloys)	High
Material Properties	Comparable to CNC Ideal assumption isotropic behavior	Susceptible to porosity Ideal assumption isotropic behavior	Comparable to CNC Anisotropic behavior
Surface Finish	Good Worse than die casting	Great Better than MIM	Requires significant post processing ~ 15μm
Cost Estimates	Very high tooling costs Multi-step process	High tooling costs	Depends on print speed Depends on quantity
Design Restrictions	Large components Can make small features (~0.1T)	Small, complex features Cannot make small features (~0.5T)	Can create “Print In Place” designs Can make small features (~0.15T)
Common Materials	316L Stainless Steel, Titanium	A380 Aluminum, Zn or Mg Alloys	Aluminum, Stainless Steel, Titanium

Personal Projects

Additive Manufacturing Study: Foldable Devices Hinge

Computation Topology Design

Pre-Computation Topology Design

Key Goal: Parts Consolidation through additive manufacturing capabilities

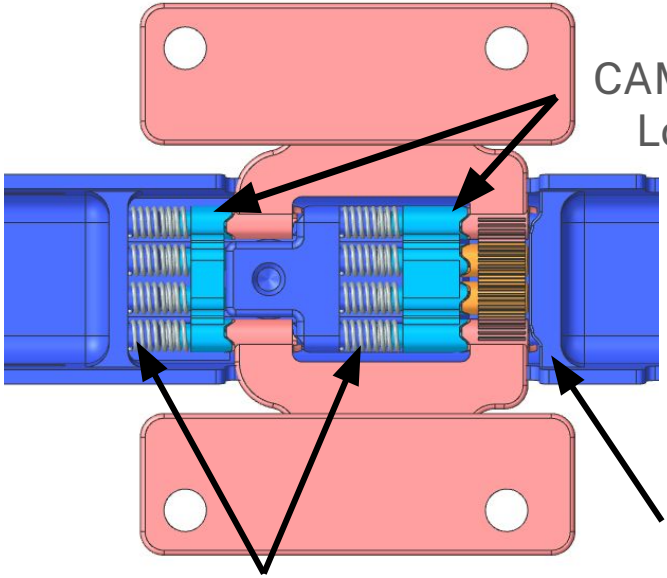

Folded Configuration

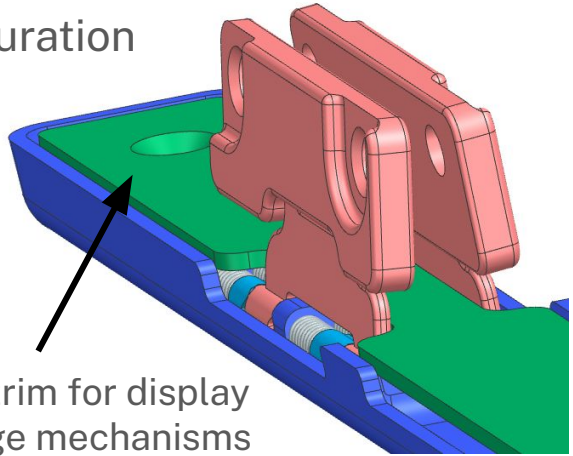

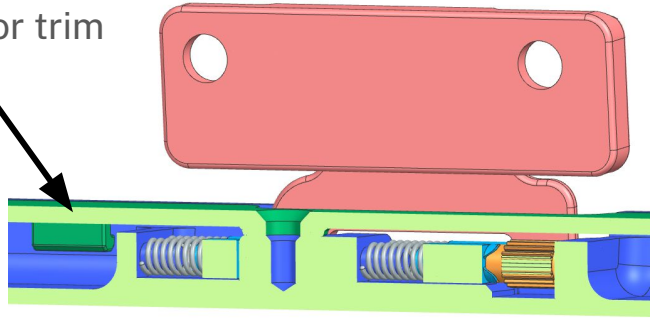

Personal Projects

Quick Release PCBA Enclosure

for Injection Molding

Overview

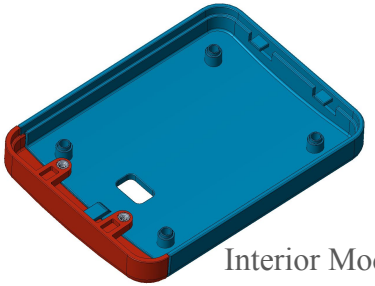

Interior Model

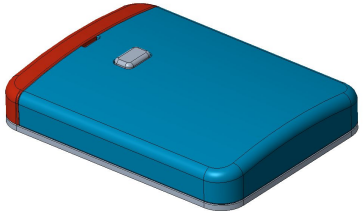

Exterior Model

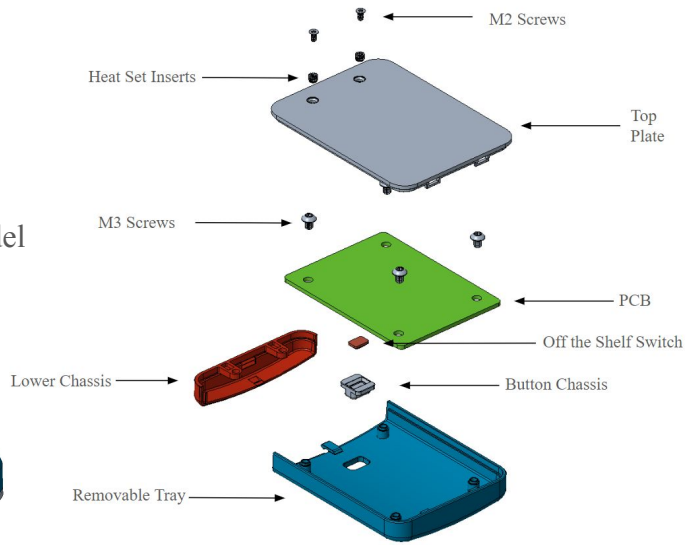

Goal/Challenge

Design a consumer facing product which can be mass produced and safely store a PCB with a button interface.

Development spun off requirements from FSAE Car development

Product to be mounted to a vehicle, PCB to be easily user accessible for data offload

CAD

PTC Creo/ProE
- Parametric Modeling
- Surface Modeling

Technical Skills

Snap Fit Design
Design for Manufacturability (Injection Molding)
Tolerance Analysis
Compressive Force Deflection Analysis (Buttons)
Prototyping and Cross Section Analysis

Personal Projects

Quick Release PCBA Enclosure

for Injection Molding

Design Proposal

Heat set insert and flush mount screw construction

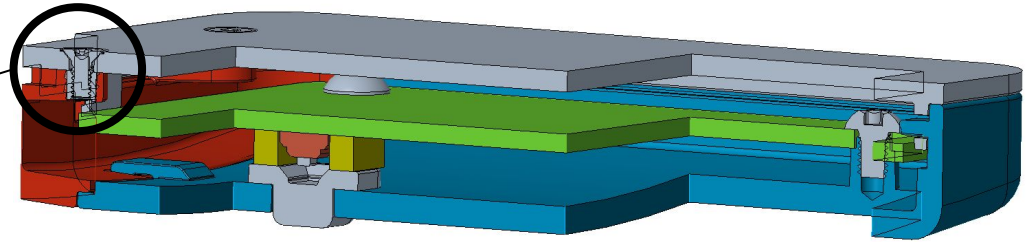

Assembly Snap-Fit
Aids assembly before mounting screws

Foam Inserts

Section view with major component designs

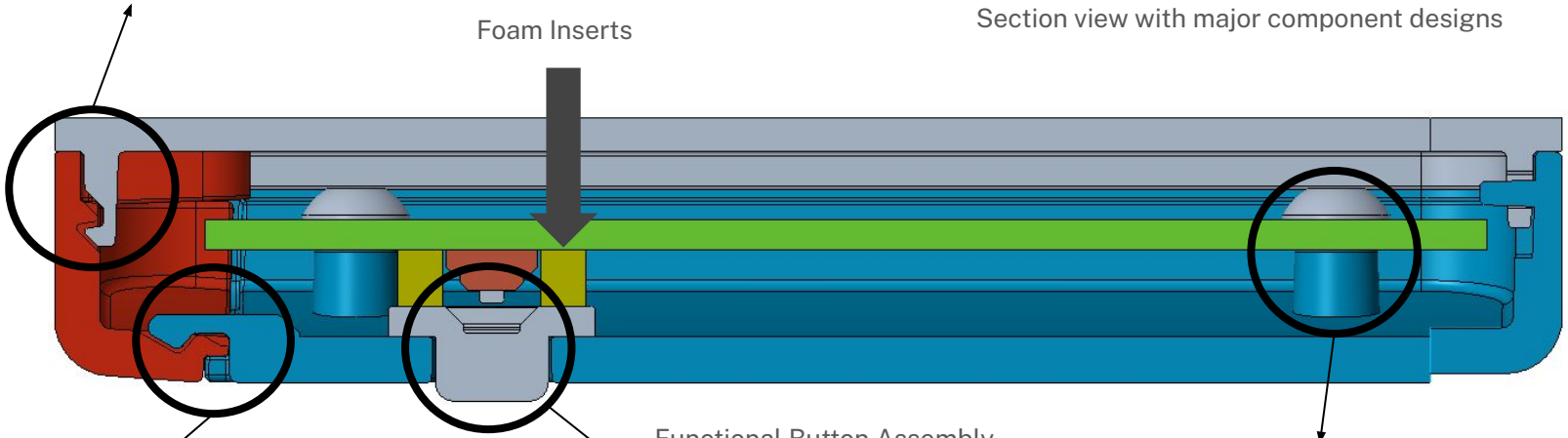

Snap-Fit
Allows for easy removal - like a TV remote

Functional Button Assembly

Long travel distance for accidental button press prevention

Screw boss design to secure PCB

Personal Projects

Quick Release PCBA Enclosure

for Injection Molding

Statistical Tolerance Analysis

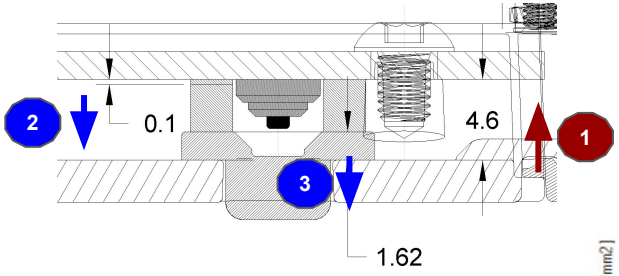

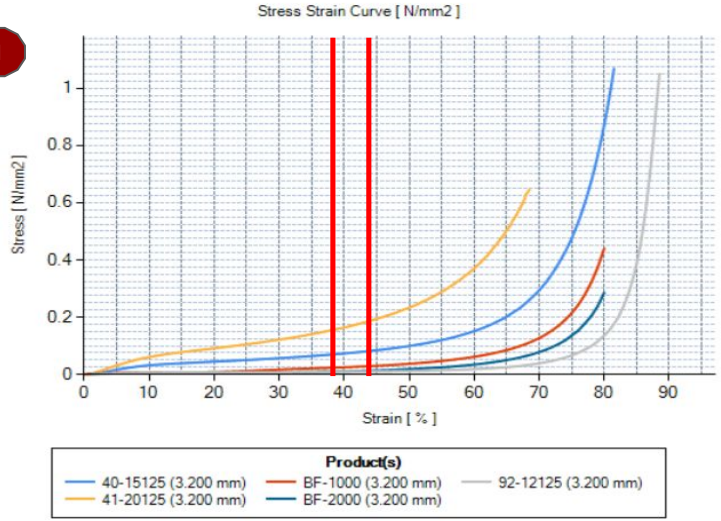

Goals:	Determine compression forces and size the gap to optimize for button depress force					

Loop	1	2	3	4	5	6
Nominal	4.6000	1.6200	0.1000			
Description	PCB to Housing	Button Base	Adhesive			
Tolerance	0.1000	0.1000	0.0100			
Direction Vector	1.0000	-1.0000	-1.0000			
Assumptions						

	Worst Case	RSS
Maximum	3.0900	3.0218
Minimum	2.6700	2.7382

Foam Strain Range (3.2mm)
38.19%
44.94%

Conclusion	RSS is not applicable; 4071-40-15125, 3.2 mm foam achieves minimum compression of 0.11 mm; achieving compression forces of 3.36N to 4N.

By performing tolerance analysis on the gap of the button and the switch, a foam with a desirable thickness and compression force could be determined. This process eliminates rattle in the product and smoothes the action of the button, improving user experience.

Example Poron Pad

Personal Projects

Quick Release PCBA Enclosure

for Injection Molding

Statistical Tolerance Analysis

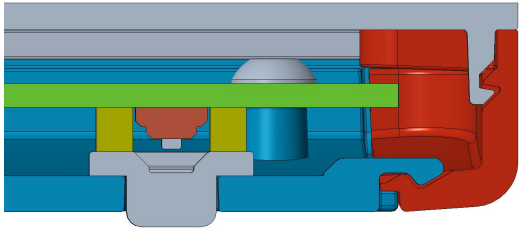

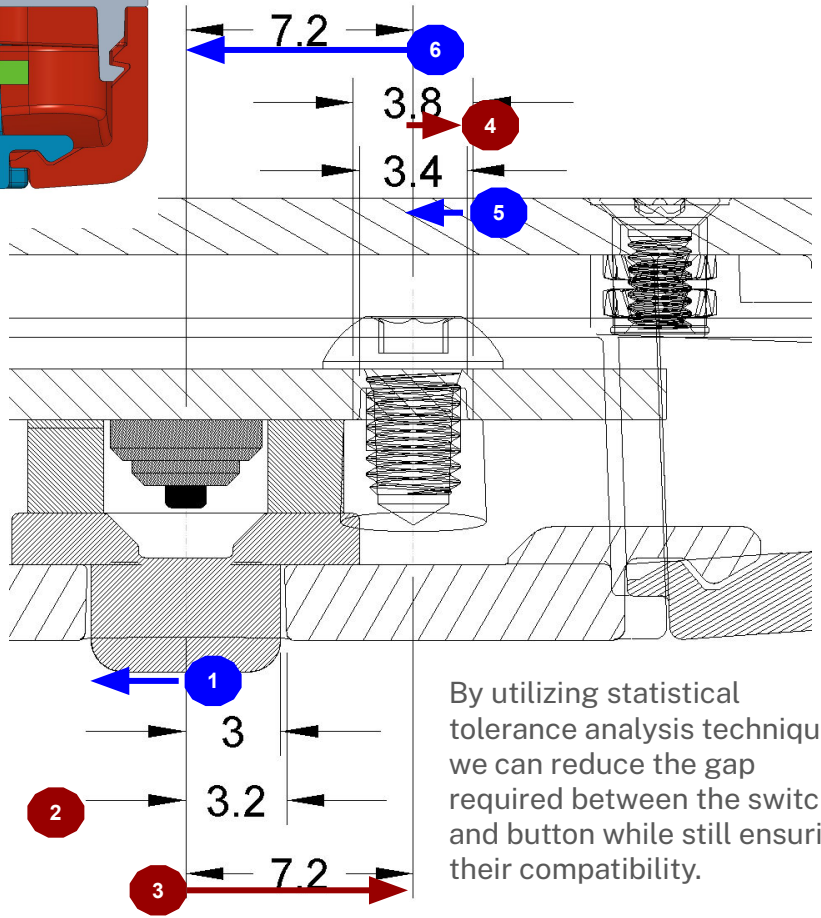

Goals:	Determine if the button will always be able to hit the switch once actuated

Loop	1	2	3	4	5	6	7
Nominal	3.0000	3.2000	7.2000	1.9000	1.7000	7.2000	
Description	Button	Tray Hole	Center Tray Hole to Center Boss	PCB Hole Radius	Boss Radius	Switch Placement	
Tolerance	0.0500	0.0500	0.1000	0.1000	0.0500	0.0800	
Direction Vector	-1.0000	1.0000	1.0000	1.0000	-1.0000	-1.0000	
Assumptions				Radius	Radius		

	Worst Case	RSS	Nominal
Maximum	0.8300	0.5841	0.4000
Minimum	0.2000	0.2159	

Biased
Gray' Button biased left, PCB biased right until contact to represent worst case. Not shown in drawing

Conclusion	RSS is applicable; Gap between switch and button is 0.85mm; 0.5841 < 0.85, therefore no further changes are required

By utilizing statistical tolerance analysis techniques, we can reduce the gap required between the switch and button while still ensuring their compatibility.

Personal Projects

Quick Release PCBA Enclosure

for Injection Molding

Tooling Design Proposal 1

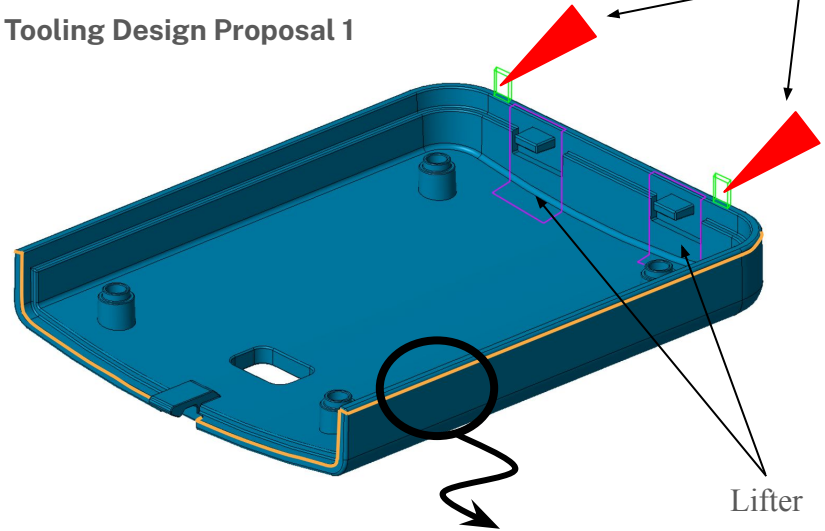

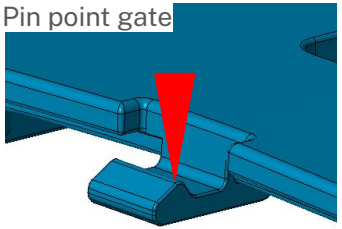

Tooling required should be a 3 plate design due to the use of the pin point gate.

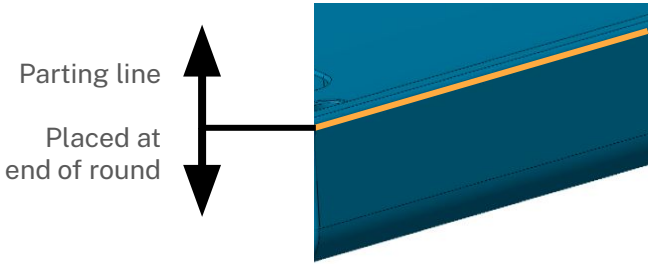

Parting lines was chosen at the edge of the housing to reduce visible parting lines. Parting line was placed at the end of the round as the rounds were placed to protect consumers from sharp edges.

Sleeve ejectors will be used on the screw boss for optimal manufacturability.

Personal Projects

Quick Release PCBA Enclosure

for Injection Molding

Tooling Design Proposal 2

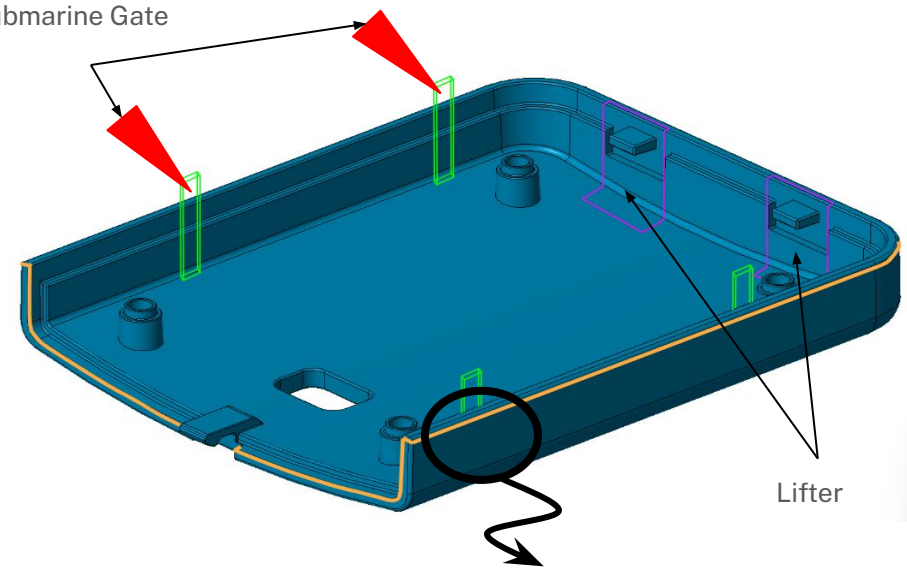

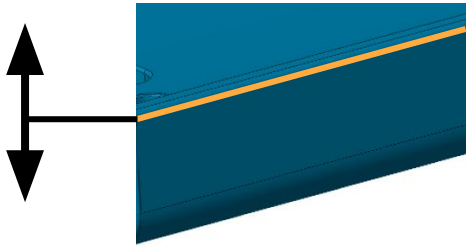

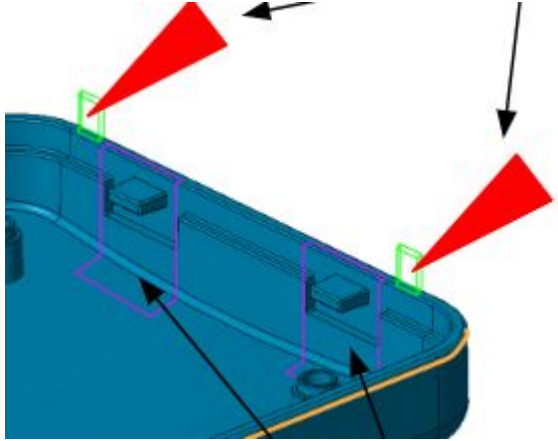

Before

Creates additional risk on mating part

Reduces risk, requires CNC cutting

After

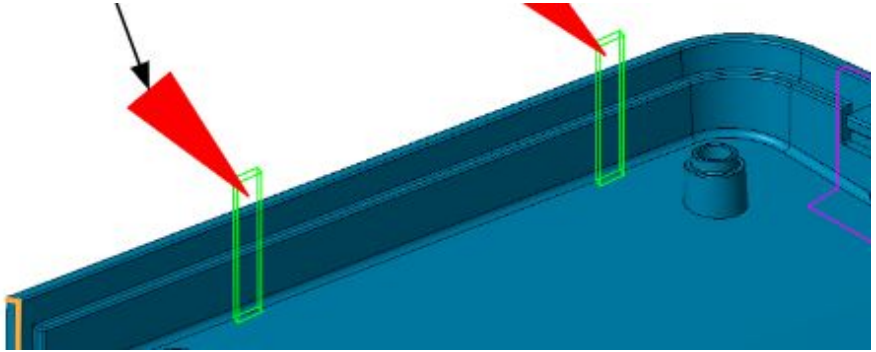

Personal Projects

Quick Release PCBA Enclosure

for Injection Molding

Prototype/Cross Section Analysis

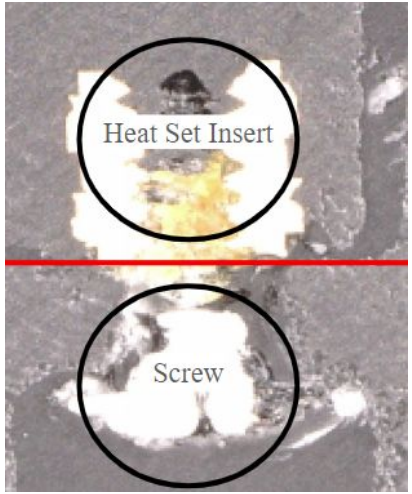

Proposed Changes

Before

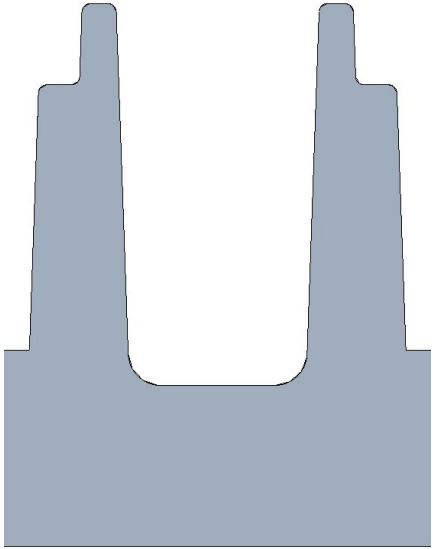

After

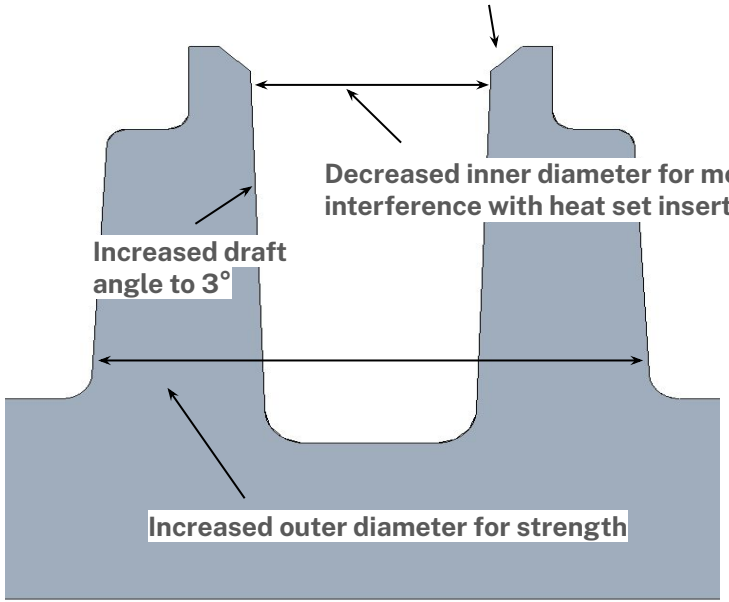

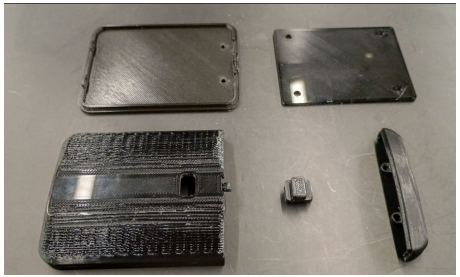

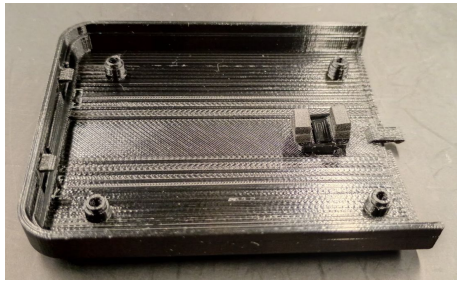

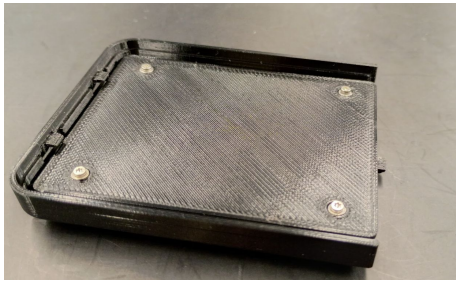

Personal Projects

Quick Release PCBA Enclosure

for Injection Molding

Final Exploded View

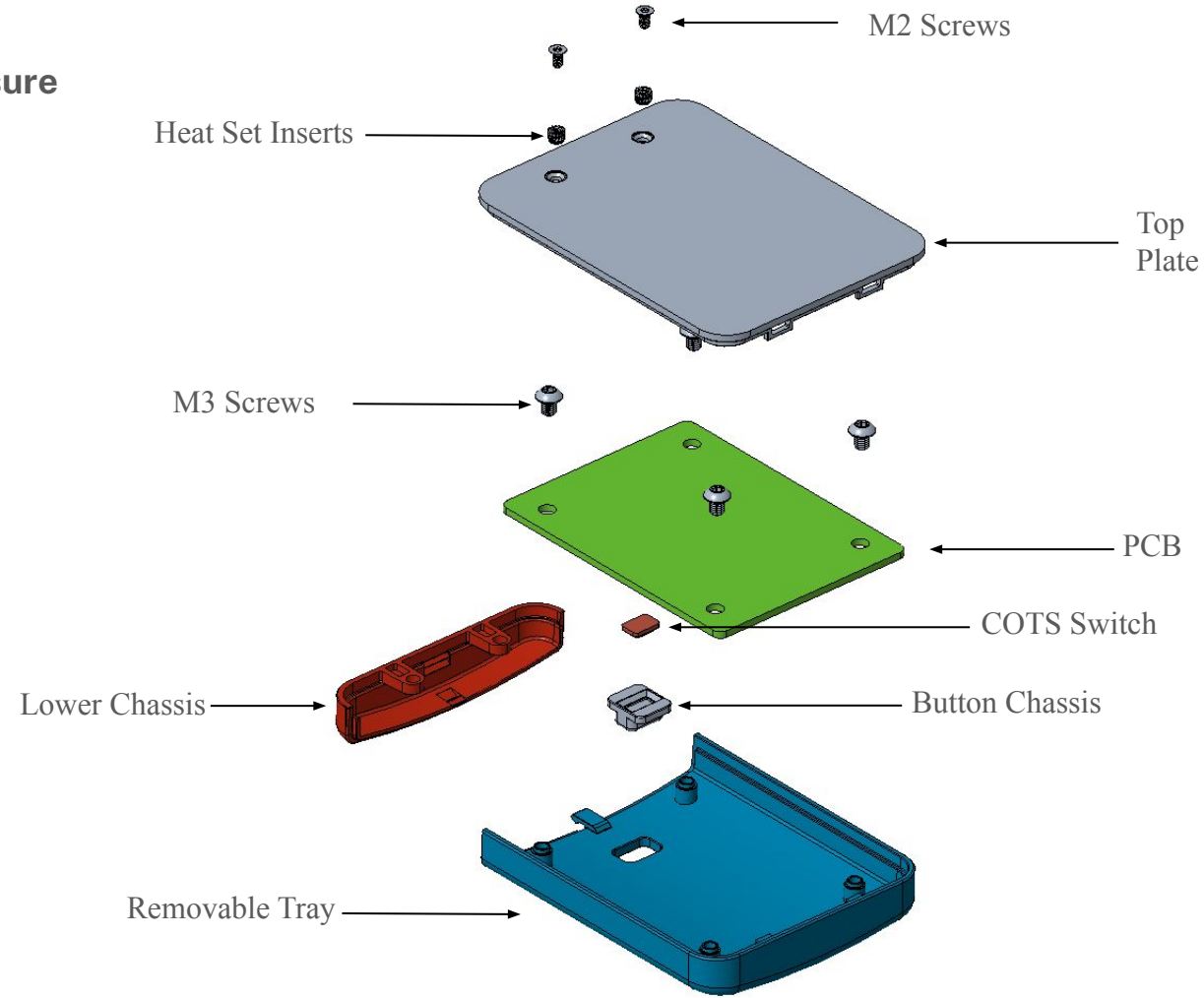

Personal Projects

Auto-sorting garbage can

Placed 1st out of 5th in Engineering Hackathon

Overview

Auto-sorting garbage can
"Green Street"

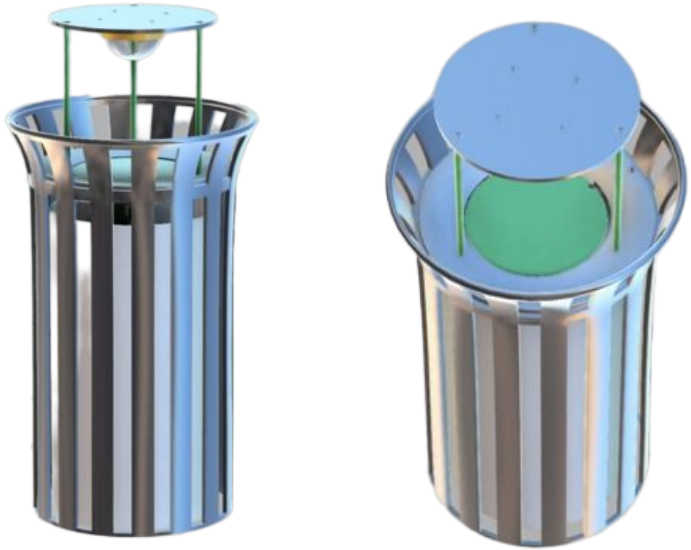

Goal/Challenge

Open design challenge on solutions to improvements of any form in recycling at any stage of modern recycling operations.

72 hours from prompt to submission, ideation and CAD due at submission time.

CAD

Autodesk Fusion 360
Parametric Modeling

Technical Skills

Team communication in fast paced environment
Market Research
DFMEA

Received judge's praises on

- Simple yet effective solution
- Low barrier to mass implementation

Official Web Link

https://devpost.com/software/green-street

Personal Projects

Auto-sorting garbage can

Placed 1st out of 5th in Engineering Hackathon

Market Research: How does Recycling Work?

General Population

Recycling starts with everyday people like you and I. The general population handles the first sorting, via recycling bins, and the first stage of cleaning, by emptying various food containers. This is an important stage to reduce contamination on other stages.

Material Recovery Facility (MRF)

Human, robotic, and mechanical sorters sort various items from your garbage bins into appropriate categories. General categories include glass, plastics, paper, and metals. Mis-recycled garbage, as well as any items contaminated by mis-recycled garbage, are sorted out.

Repackaging

Sorted items are now capable of undergoing each respective material's recycling process. This is typically done through melting the material down, but not always (such as paper).

Personal Projects

Auto-sorting garbage can

Placed 1st out of 5th in Engineering Hackathon

Design Ideation

	Option 1 AI powered sorting at MRF. Replaces human sorters to improve efficiency and accuracy	Option 2 Sorting tool within garbage trucks that transport recyclables to supplements sorting prior to MRF.	Option 3 Smartphone application to assist general population in categorizing recyclables.	Option 4 Integrated sorter in public streets to enable recycling in places without recycling bins, without effort.	Option 5 Self cleaning garbage trucks will clean the garbage compartments to reduce contamination.
Process Improvement **Higher is better**	Medium	High	Low	High	Low
ME Risks	Low	High	Low	Medium	High
EE/SW Risks	High	Medium	Low	Low	Low
Costs	Medium	High	Low	Medium	Medium

Personal Projects

Auto-sorting garbage can

Placed 1st out of 5th in Engineering Hackathon

Design Failure Mode and Effects Analysis (DFMEA)

Function	Requirements	Failure Modes	Effects	Causes	Next Steps/Mitigation
Automatically sorts recyclables and non-recyclables through vision AI and an actuated platform	Accurately identifies recyclables vs non-recyclables	False Positives	More non-recyclables in recycling	SW: Insufficient AI data	Improve AI as data sets improve in quality and quantity with deployment
		False Negatives	More recyclables in landfills	Environmental: Low Light, weather phenomenon	Integrated LED flash for low light scenarios. Shielded and sealed for anti-rain and fog capability
	Accurately sorts recyclables vs non-recyclables	Actuators do not actuate	Garbage bin is inaccessible	Loss of power	Analyze 90% average US weather and size battery based on weather and power usage
				Loss of signal	Study and implement design features from existing civil infrastructure such as traffic lights or street lights

Personal Projects

Auto-sorting garbage can

Placed 1st out of 5th in Engineering Hackathon

Design and CAD

Actuator SubAssembly

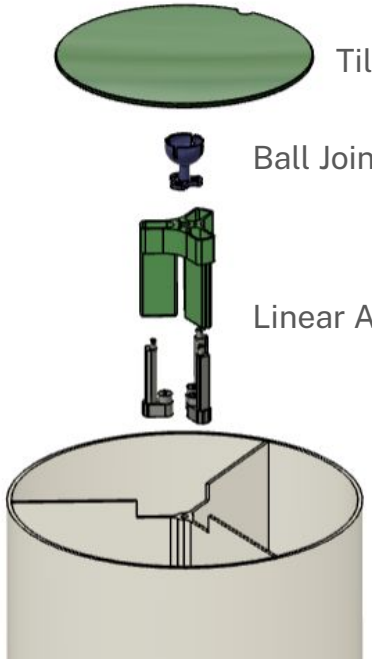

Sensor SubAssembly

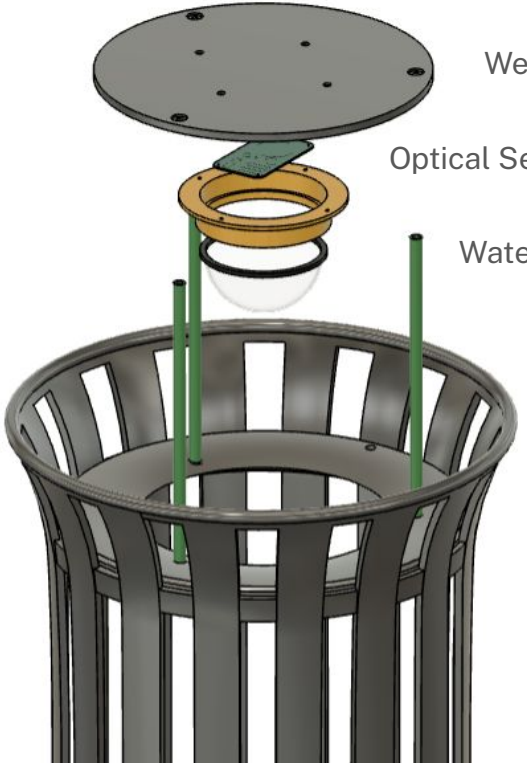

Class Projects

Media Dispensing System

Receiver Reservoir

Overview

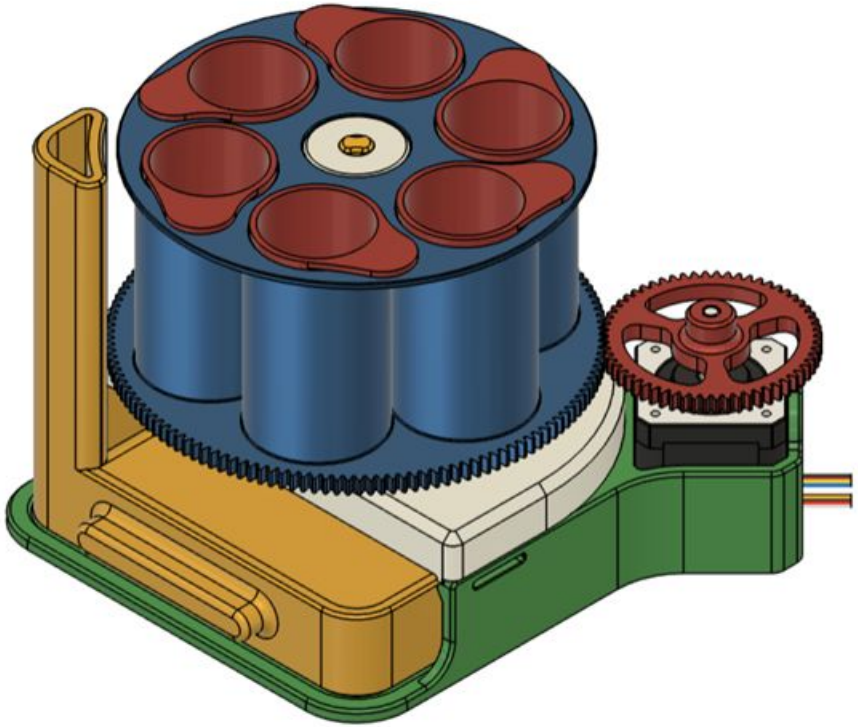

Goal/Challenge

DRI for receiver reservoir for a media dispensing system requiring sterile automation of cell culture media

Handled parts selection, mechanical, electrical, and software design of subsystem

CAD

Autodesk Fusion 360

Software

Arduino Code

Technical Skills

Motor Control
Load Cell/Strain Gauge Integration
Gear Design
FDM 3D Printing
SLA 3D Printing

Class Projects

Media Dispensing System

Receiver Reservoir

CAD

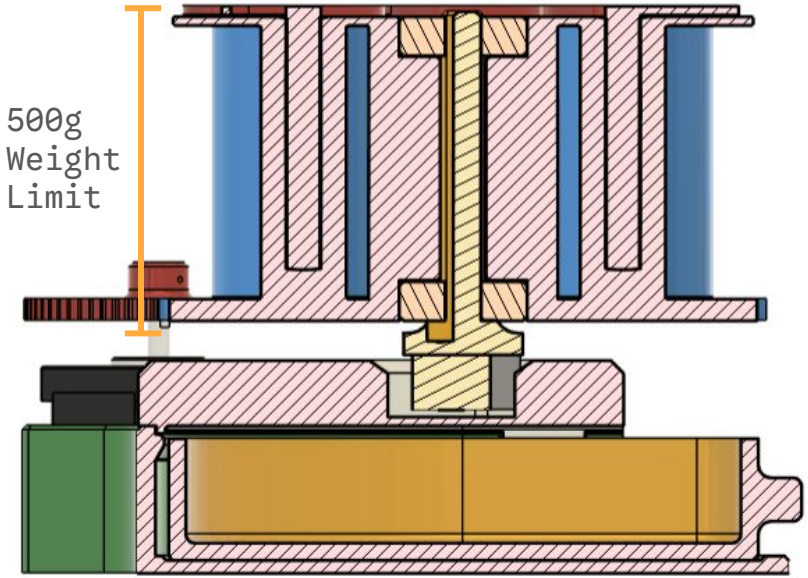

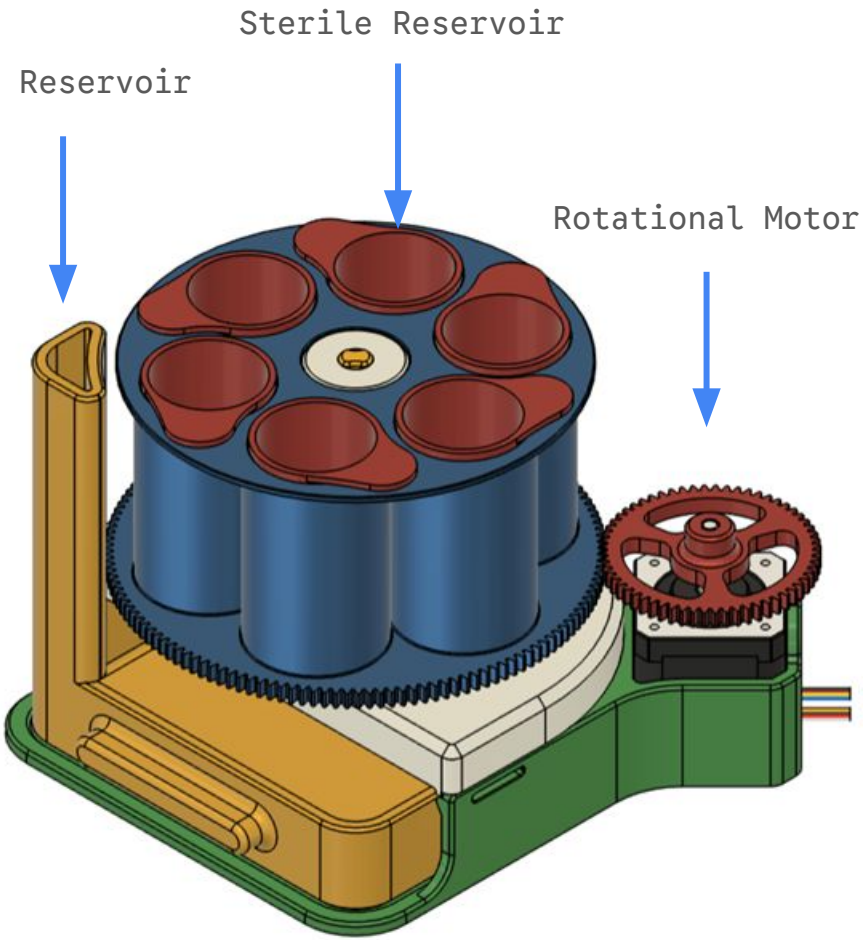

Class Projects

Media Dispensing System

Receiver Reservoir

Control

Load Cell Accuracy: 0.03% FS

Minimum Pump Accuracy: 0.5 ml

Theoretical Pump Accuracy: 0.3 ml

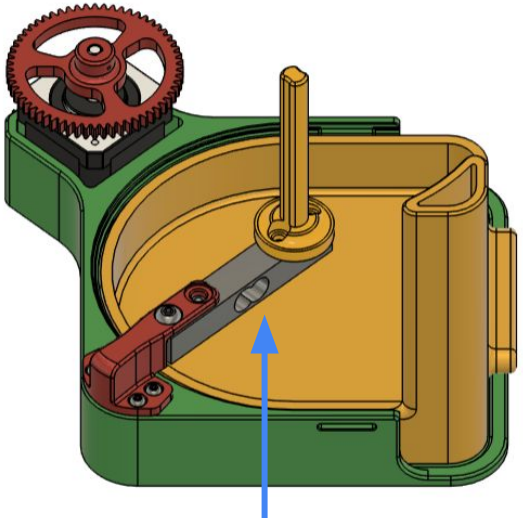

1 Kg Load Cell

'Floating' Design

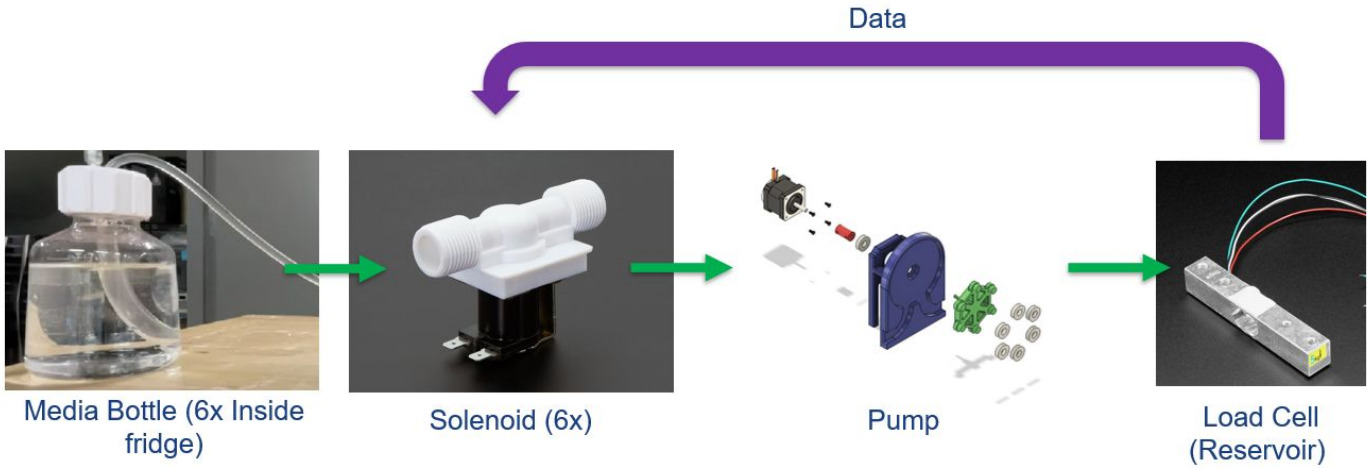

Class Projects

Driving Vehicle

With Transmission

Overview

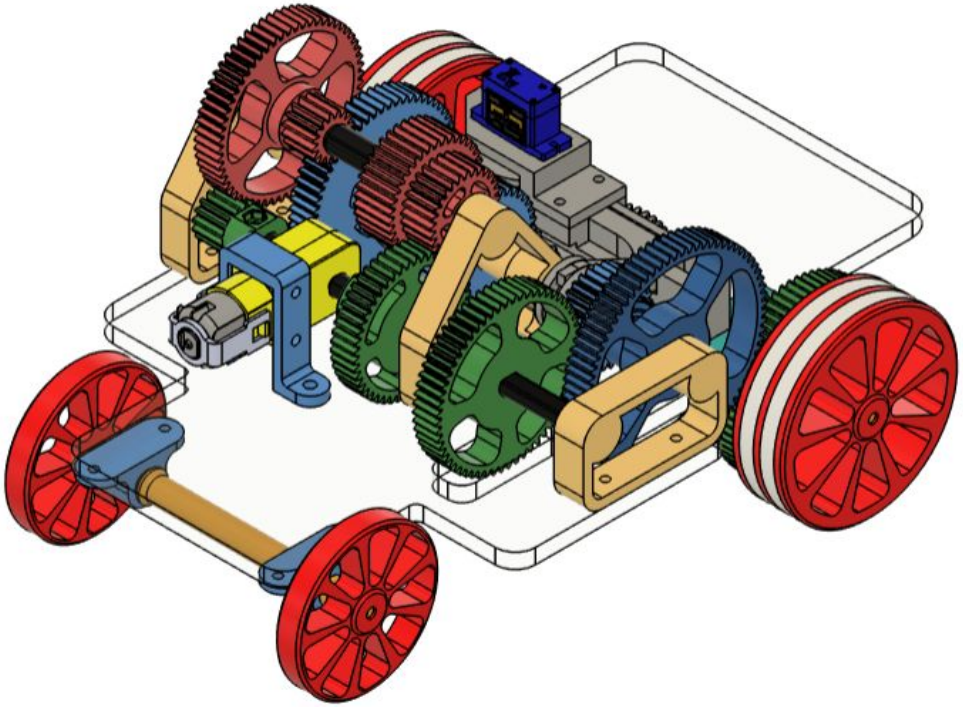

Goal/Challenge

DRI for all gearing/driving components

Handled mechanical calculations and design to ensure vehicle met speed, torque, and repairability metrics

CAD

Autodesk Fusion 360

Software

Arduino Code

Technical Skills

Motor Control
Gear Design
FDM 3D Printing

Class Projects
Driving Vehicle
With Transmission
CAD

Speed Requirements:
1 m/s on level ground

Speed Gear Ratio 1 : 2

Torque Requirements:
1.5 Kg tow on 15° incline

Torque Gear Ratio:
7.5 : 1

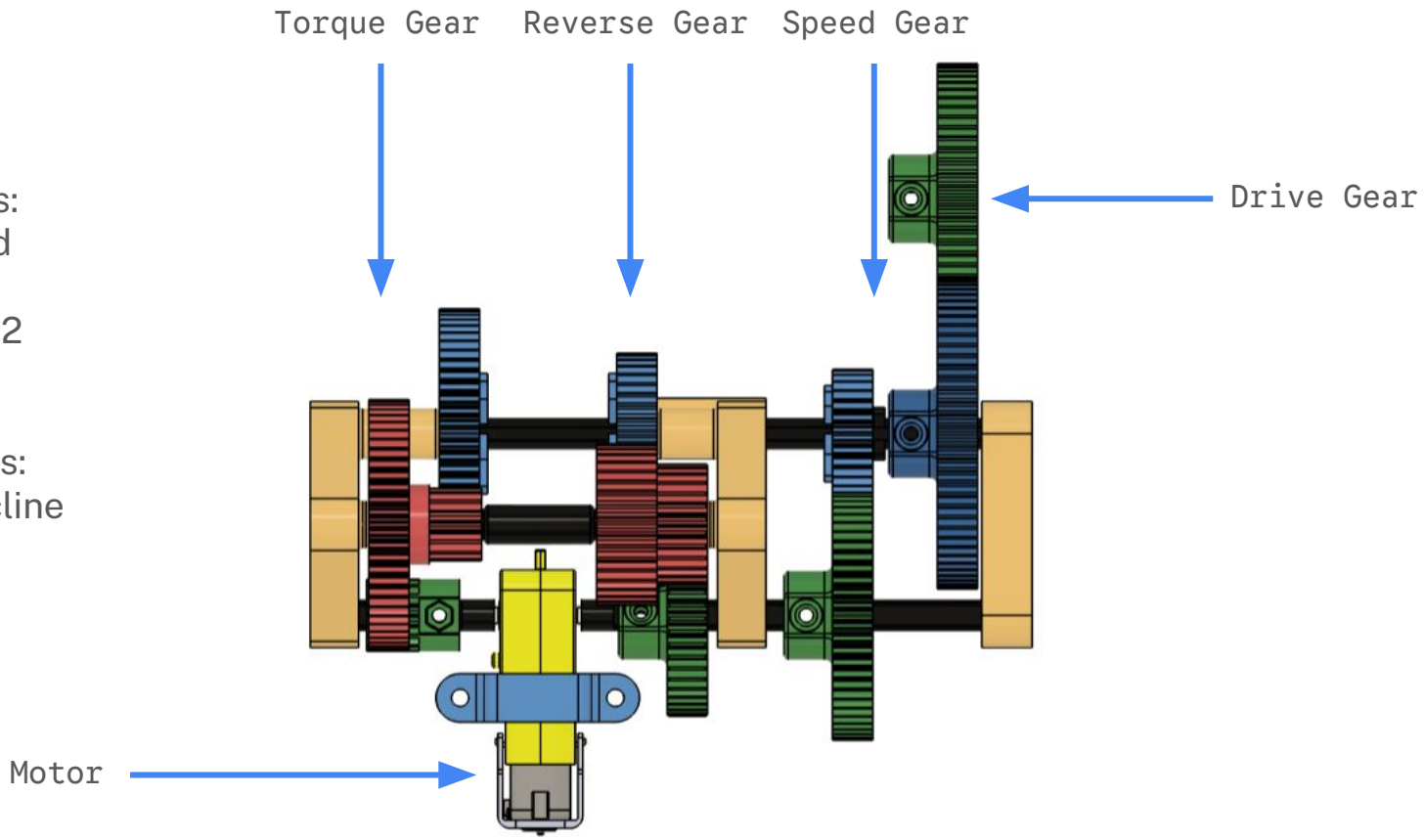

Class Projects

Automated Fruit Cutter

Overview

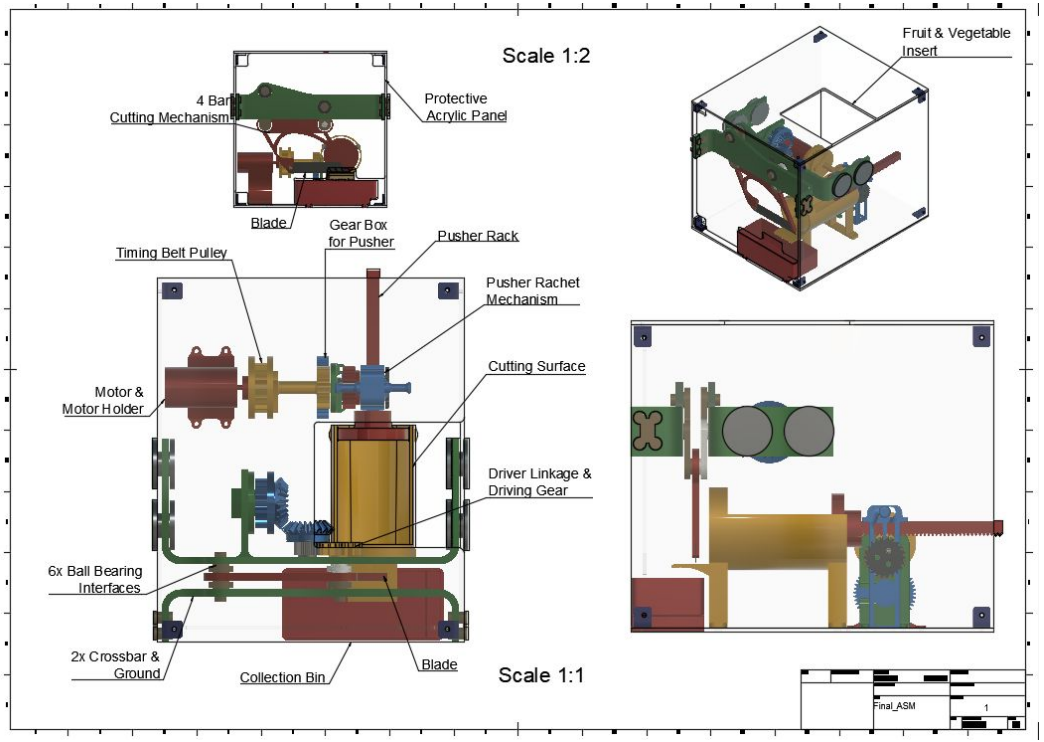

Goal/Challenge

Create a fruit cutter appliance which can demonstrate ability to cut fruit into relatively equal sizes without human intervention.

Study and design based on principles of robotics and mechanical linkages

Class project in team of 4

CAD

Autodesk Fusion 360

Software

MATLAB

Technical Skills

Mechanical Dynamics
Linkage Systems Design
PVA Mechanical Analysis
Gear Design
FDM 3D Printing

Class Projects

Automated Fruit Cutter

CAD

Ratcheting Pusher Mechanism

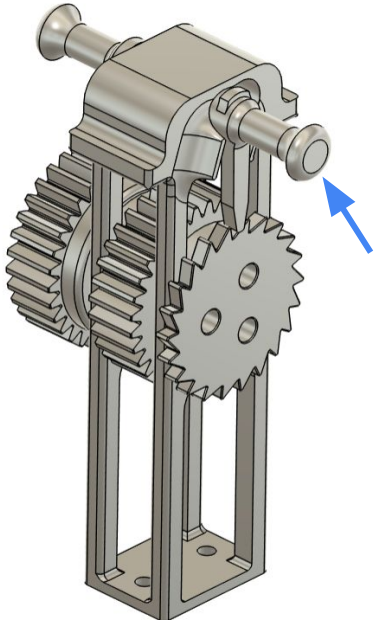

Ratchet prevents pushback during cutting motion

Toggle snap hand lever allows unlocking of ratchet to reset machine safely

Responsible for entire pusher subsystem design shown

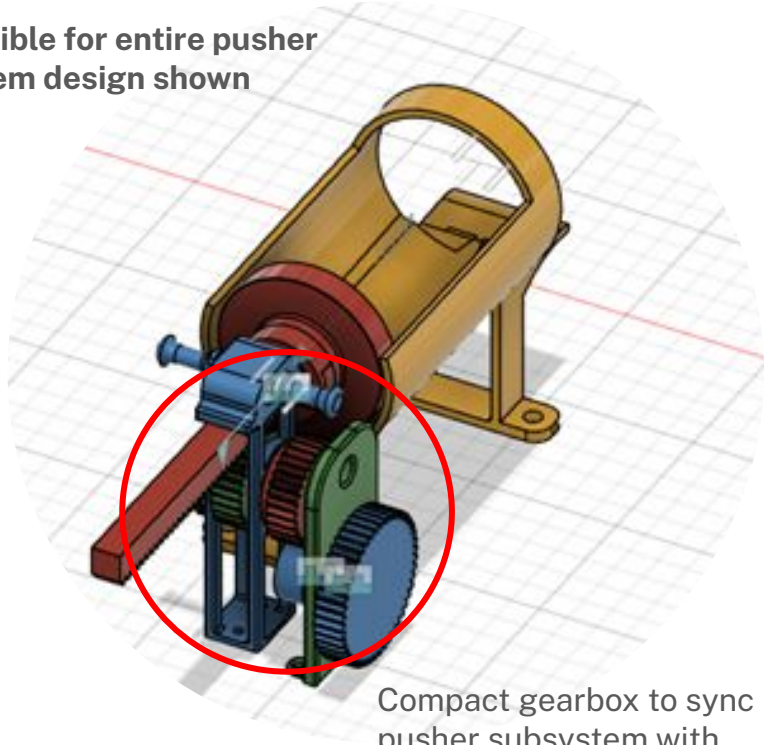

Compact gearbox to sync pusher subsystem with cutter mechanism

Class Projects

Automated Fruit Cutter

CAD

Cutting Mechanism

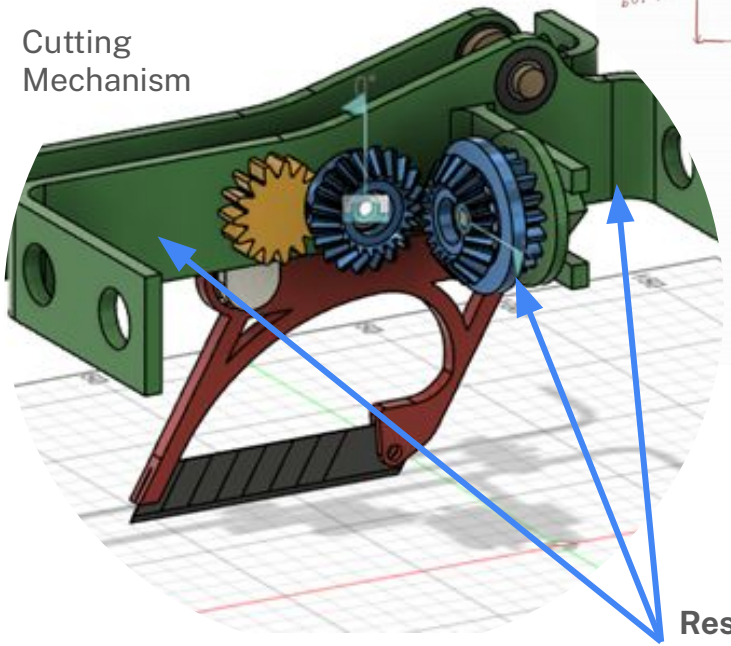

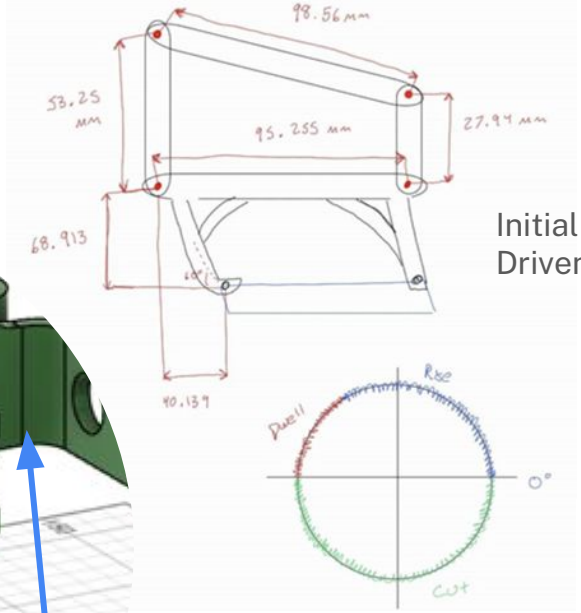

Initial Concept Sketch
Driven by computational analysis

Responsible for gearbox system integration design
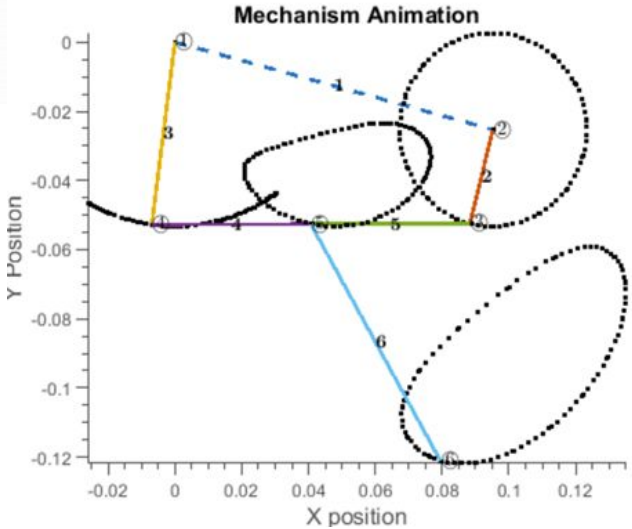
Responsible for MATLAB Mechanism Analysis